ARVEN

MIZAR 60

Pos.	Tipo	MZR0600 5 mt. Autom.	MZR0602 10 mt. Autom.	MZR0603 10 mt. Man.	Q.tà
1	**Motore completo – *Full set of motor/frame* – Moteur complet**	**0998.MZR0600.RI**	**0998.MZR0600.RI**	**0998.MZR0600.RI**	**1**
1a	Porta motore – *Motor flange* – Flasque moteur	0205.ALK0300.00	0205.ALK0300.00	0205.ALK0300.00	1
1b	Anello di compensazione – *Adjusting ring* – Ressort	0651.TGR0800.00	0651.TGR0800.00	0651.TGR0800.00	1
1c	Cuscinetto – *Bearing* – Coussinet	0676.TGR0800.00	0676.TGR0800.00	0676.TGR0800.00	1
1d	Cuscinetto – *Bearing* – Coussinet	0680.RMC1000.00	0680.RMC1000.00	0680.RMC1000.00	1
2	**Ass.Coperchio – *Cover unit* – Couvercle assemble**	**0997.MZR0300.00**	**0997.MZR0302.00**	**0997.MZR0303.00**	1
2a	Galleggiante – *Floating switch* – Contacteur à flotteur	0780.RGL0300.00	0780.RGL0300.00	- - -	1
2b	Cavo alimentaz. – *Cable with plug* – Cable d'alimentation	0755.TGR0800.00	0752.TGR0800.00	0752.TGR0800.00	1
2c	Carcassa esterna – *External motor housing* – Carcasse extérieure	0156.MZR0300.00	0156.MZR0300.00	0156.MZR0300.00	1
2d	Guarnizione OR – *"O" Ring* – Garniture "OR"	0501.MZR0300.00	0501.MZR0300.00	0501.MZR0300.00	1
2e	Coperchio – *Cover* – Couvercle	0367.ALK0300.00	0367.ALK0300.00	0367.RGL0401.00	1
2f	Guaina – *Cable sheath* – Gaine	0478.TGR0800.00	0478.TGR0800.00	- - -	1
2g	Guaina – *Cable sheath* – Gaine	0478.TGR0800.00	0478.TGR0800.00	0478.TGR0800.00	1
2h	Pressaguaina – *Protective covering clamping* – Presse gaine	0106.ALK0300.00	0106.ALK0300.00	0106.ALK0300.00	1
2i	Vite – *Screw* – Vis	0588.RGL0300.00	0588.RGL0300.00	0588.RGL0300.00	4
2l	Antistrappo – *Anti-Learing* – Antifente	0652.TGR0800.00	0652.TGR0800.00	- - -	1
2m	Antistrappo – *Anti-Learing* – Antifente	0652.TGR0800.00	0652.TGR0800.00	0652.TGR0800.00	1
2n	Dado – *Nut* – Ècrou	0550.RGL0300.00	0550.RGL0300.00	0550.RGL0300.00	2
2o	Rondella – *Washer* – Rondelle	0625.RGL0300.00	0625.RGL0300.00	0625.RGL0300.00	2
2p	Piastrina fermagalleg. – *Float clamping* – Plaquette fixe-flotteur	0102.ABS1000.00	0102.ABS1000.00	0102.ABS1000.00	1
3	Vite – *Screw* – Vis	0588.RGL0300.00	0588.RGL0300.00	0588.RGL0300.00	26
4	Condensatore – *Capacitor* – Condensatour	0731.RGL0500.00	0731.RGL0500.00	0731.RGL0500.00	1
5	Guarnizione OR – *"O" Ring* – Garniture "OR"	0509.ALK0300.00	0509.ALK0300.00	0509.ALK0300.00	1
6	Guarnizione OR – *"O" Ring* – Garniture "OR"	0508.ALK0300.00	0508.ALK0300.00	0508.ALK0300.00	1
7	Guarnizione OR – *"O" Ring* – Garniture "OR"	0504.RGL0300.00	0504.RGL0300.00	0504.RGL0300.00	1
8	Flangia porta motore – *Motor flange* – Flasque moteur	0359.MZR0300.00	0359.MZR0300.00	0359.MZR0300.00	1
9	Guarnizione MIM – *MIM gasket* – Garniture MIM	0530.TGR0800.00	0530.TGR0800.00	0530.TGR0800.00	2
10	Guarnizione OR – *"O" Ring* – Garniture "OR"	0509.MZR0300.00	0509.MZR0300.00	0509.MZR0300.00	1
11	Tenuta meccanica – *Mechanical seal* – Garniture mécanique	0471.TGR0800.00	0471.TGR0800.00	0471.TGR0800.00	1
12	Girante – *Impeller* – Turbine	0364.MZR0500.00	0364.MZR0500.00	0364.MZR0500.00	1
13	Rondella – *Washer* – Rondelle	0634.RPX0732.00	0634.RPX0732.00	0634.RPX0732.00	1
14	Dado – *Nut* – Ècrou	0556.TGR0800.00	0556.TGR0800.00	0556.TGR0800.00	1
15	Guarnizione OR – *"O" Ring* – Garniture "OR"	0507.MZR0300.00	0507.MZR0300.00	0507.MZR0300.00	1
16	Diffusore – *DIffuser* – Diffuseur	0204.MZR0300.00	0204.MZR0300.00	0204.MZR0300.00	1
17	Griglia aspirazione – *Grid* – Grille d'aspiration	0182.MZR0300.00	0182.MZR0300.00	0182.MZR0300.00	1
18	Dado – *Nut* – Ècrou	0555.TGR0800.00	0555.TGR0800.00	0555.TGR0800.00	3

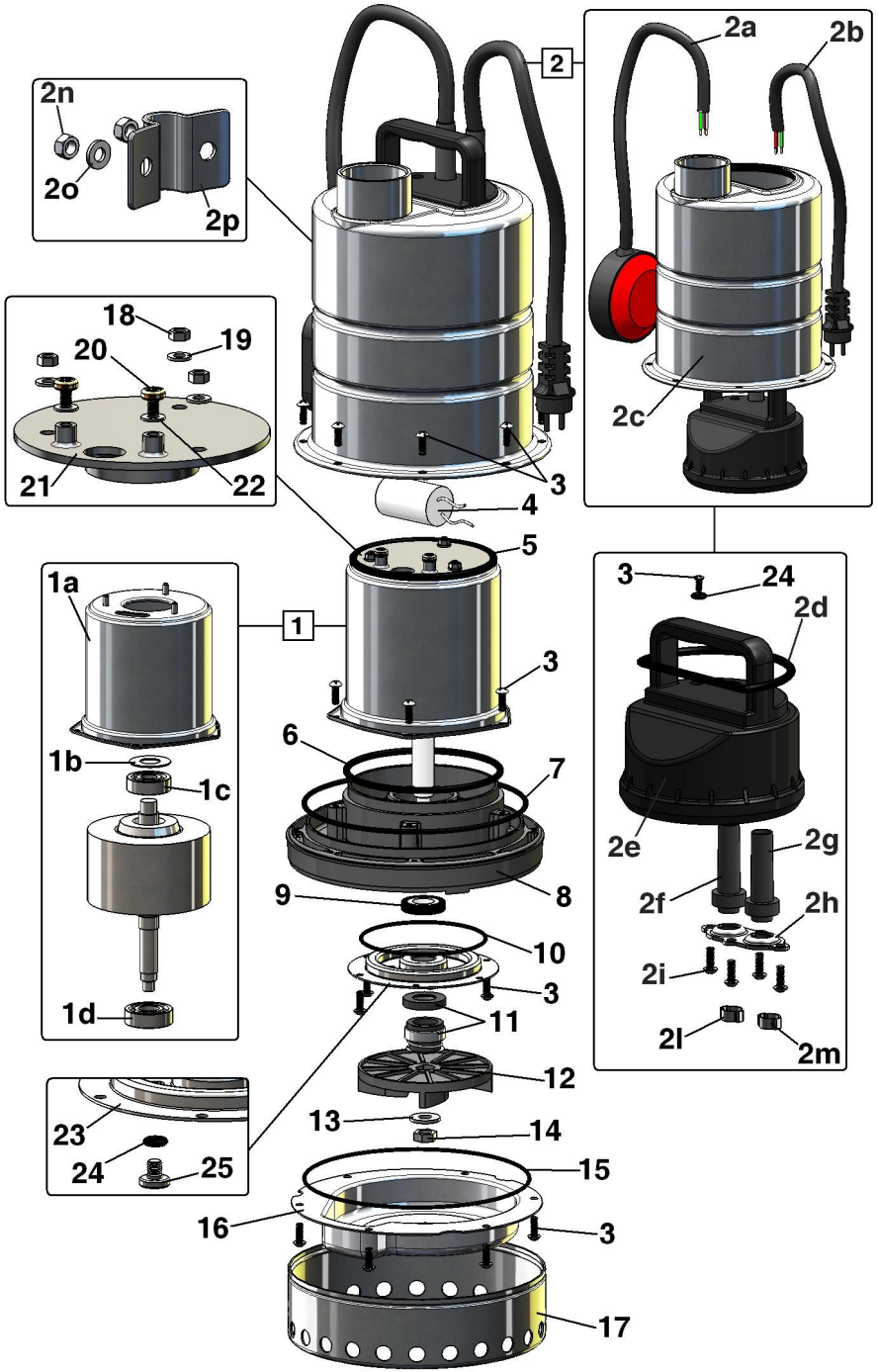

MIZAR 60
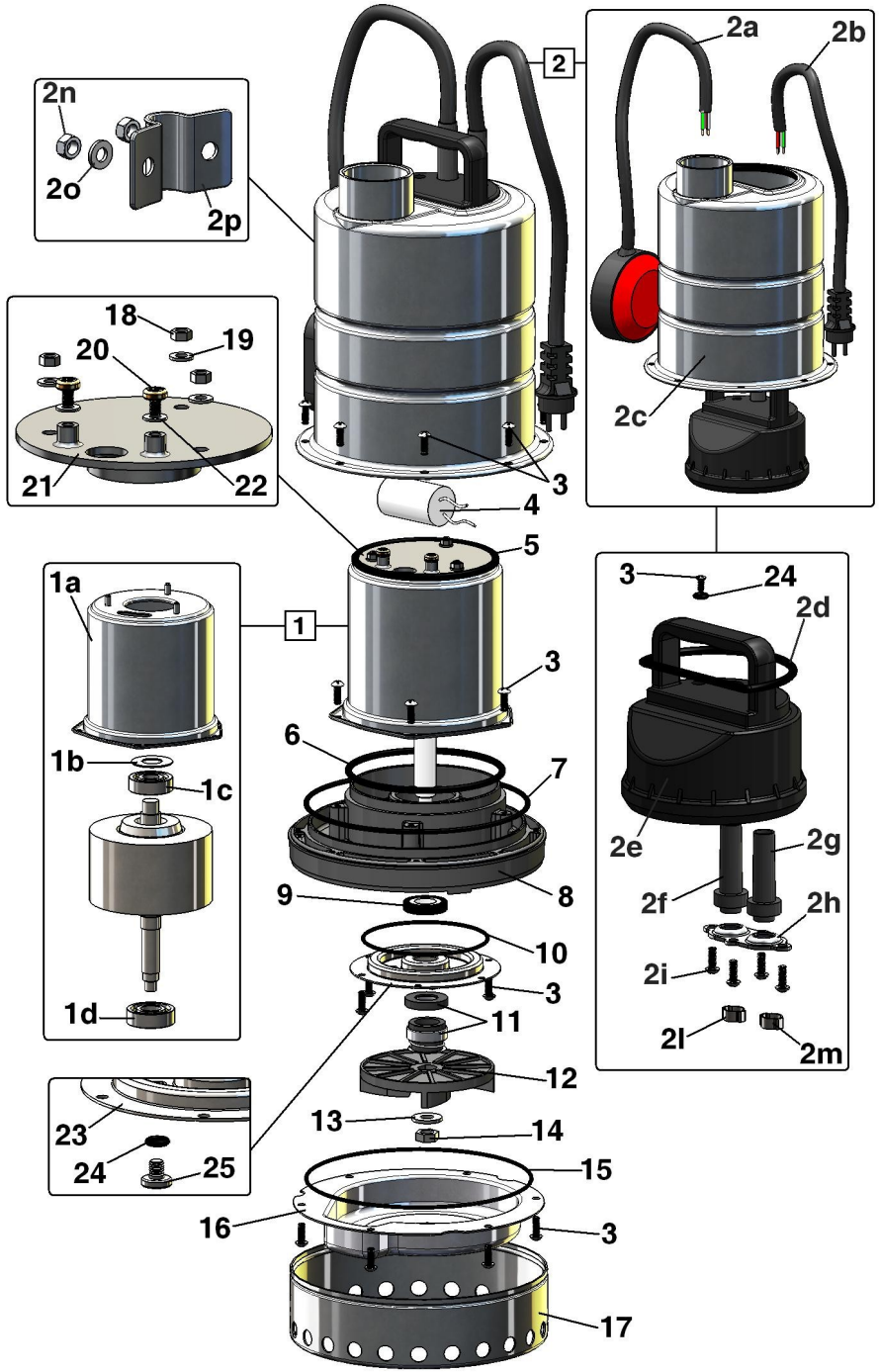
Pos.	Tipo	MZR0600 5 mt. Autom.	MZR0602 10 mt. Autom.	MZR0603 10 mt. Man.	Q.tà
19	Rondella – *Washer* – Rondelle	0625.RGL0300.00	0625.RGL0300.00	0625.RGL0300.00	3
20	Vite – *Screw* – Vis	0576.TGR0800.00	0576.TGR0800.00	0576.TGR0800.00	2
21	Porta cuscinetti – *Bearing holder* – Porte-coussinet	0329.ALK0300.00	0329.ALK0300.00	0329.ALK0300.00	1
22	Rondella – *Washer* – Rondelle	0628.TGR0800.00	0628.TGR0800.00	0628.TGR0800.00	2
23	Disco portaten. – *Mechan.seal disc holder* – Plateau porte garnit.mécan	0210.MZR0300.00	0210.MZR0300.00	0210.MZR0300.00	1
24	Guarnizione OR – *"O" Ring* – Garniture "OR"	0504.TGR0800.00	0504.TGR0800.00	0504.TGR0800.00	2
25	Tappo – *Plug* – Bouchon	0405.RGL0300.00	0405.RGL0300.00	0405.RGL0300.00	1